Roasting solutions

A new roasting philosophy

ROASTINSTEP

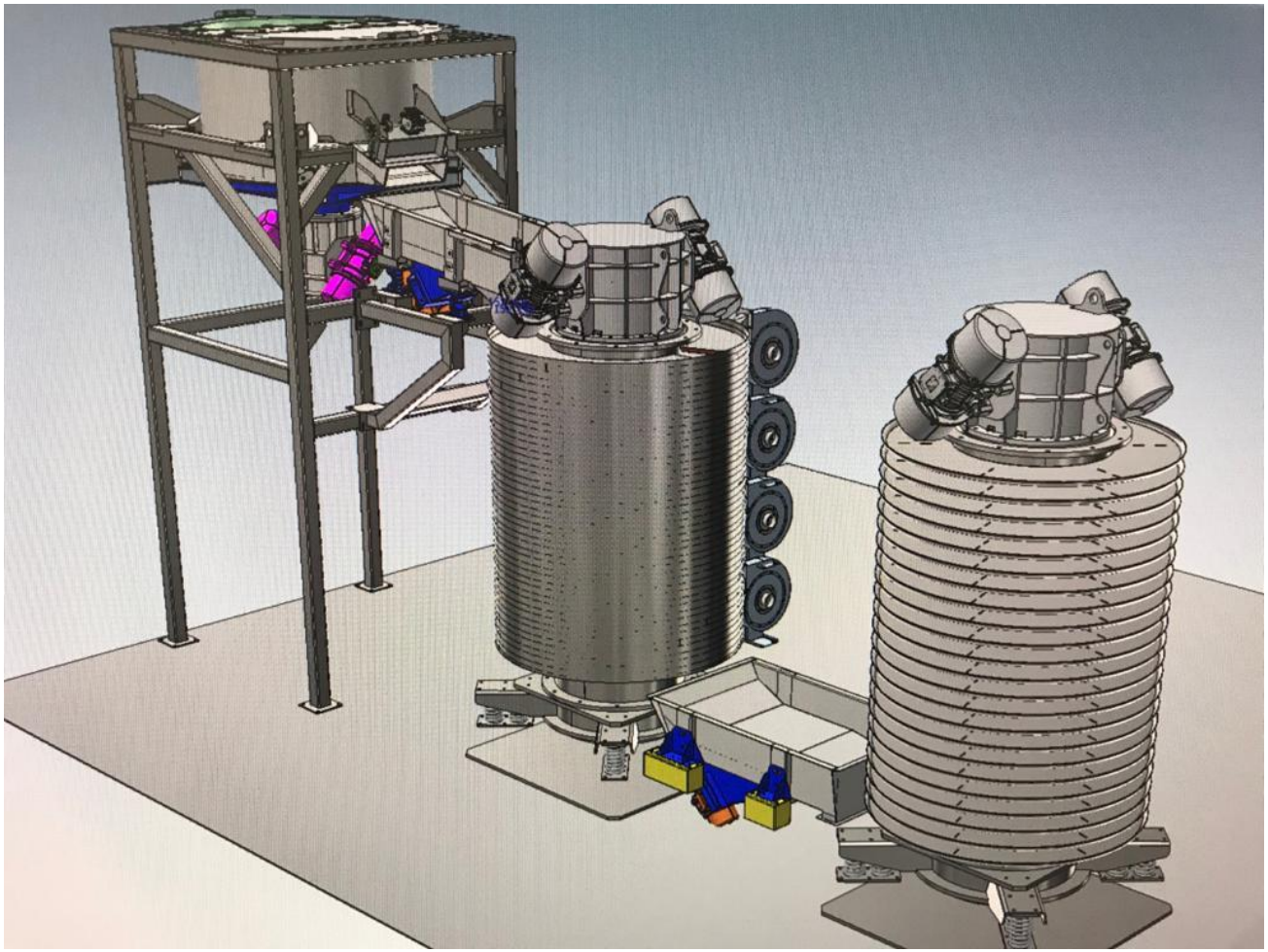

Roast anything, anywhere in one system


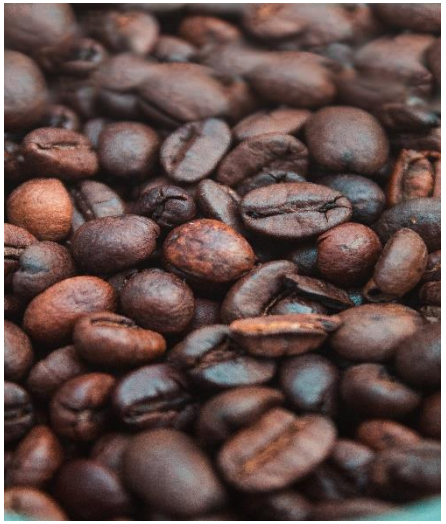



1. Roasting requirements

What makes a roaster efficient ?

- Residence time adjustable from 6 – 50 min
- Product temperature ≈ 140°C -220°C (284°F – 302°F), depending on product

A 6-50 min passing time at an average temperature of ≈ 140°C is necessary to develop the flavors of the roasting product properly, to protect its texture and shape and to avoid the development of peroxides.

Aroma development parameters

- Possibility to treat humid product (up to 20%), alkalinized cocoa beans
- Importance of the ratio air/product (= solid/gas balance)
- Importance of the mixing to homogenize the treatment

Existing technologies

Batch roaster

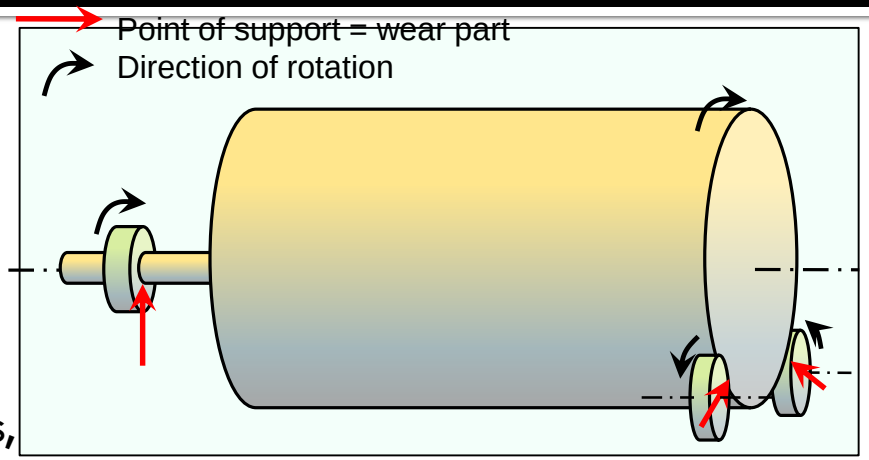

- BATCH system
  - Used for all particles sizes
  - <u>Advantages</u> :

    most common on the market,

    flexible technology: able to treat wet products,

    high quality of treated product,

    filling ratio: 70% (aroma development),

    System easy to set-up

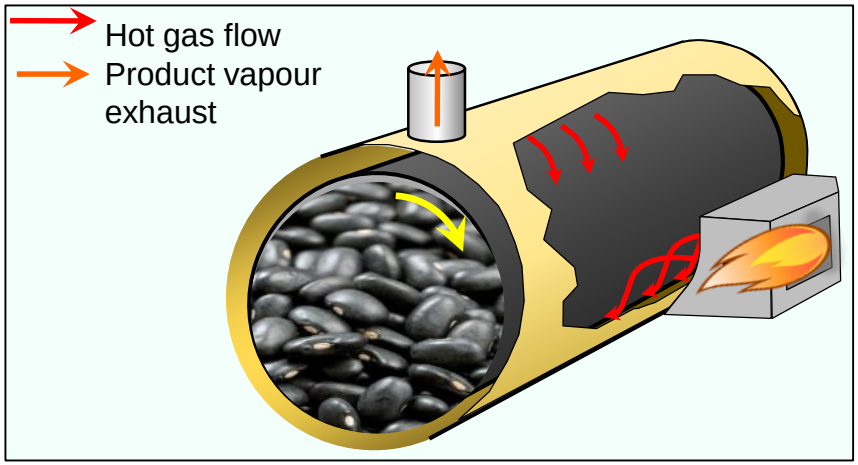

  - <u>Limits</u> :

    batch = high operating costs,

    many moving wear parts,

    energy efficiency ≈ 60% (energy used to heat the product is blown away)

    Product is in mass

electrical consumption (based on a 5t/h unit) ≈ **<u>280 kWh/t</u>**

Existing technologies

Batch Roaster

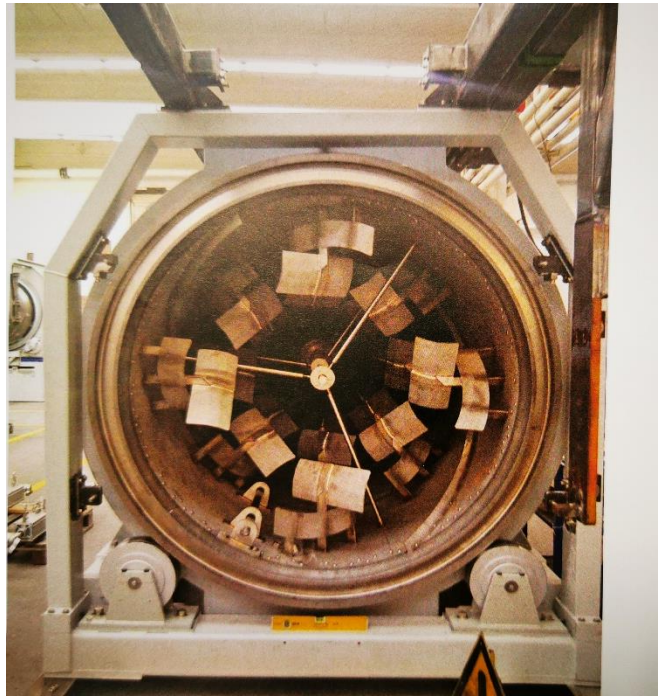

Existing technologies

drum roaster rotating paddles

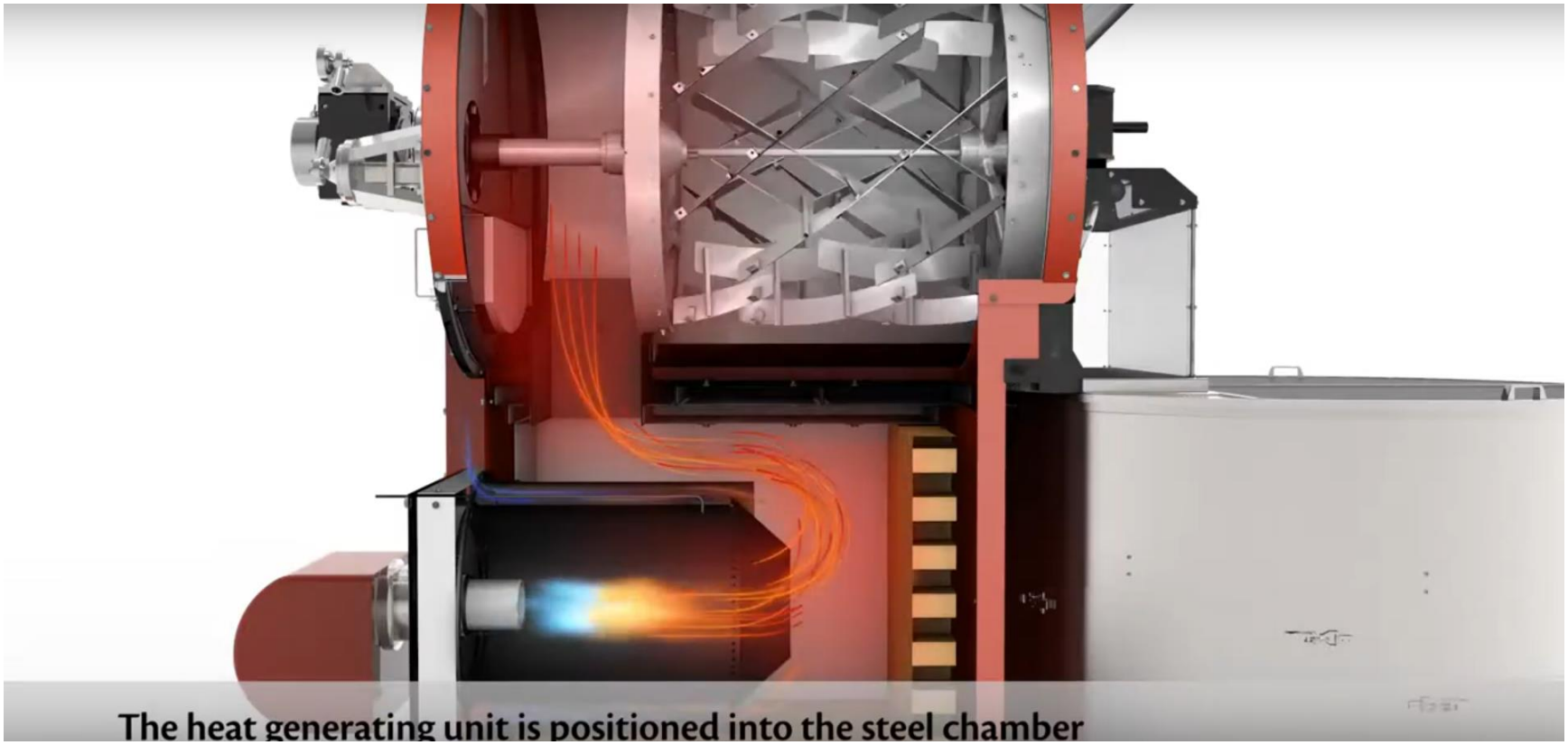

Existing technologies

Batch roaster

Rotating chamber heating by contact (gaz powered)

Existing technologies

Vertical roaster heating by air

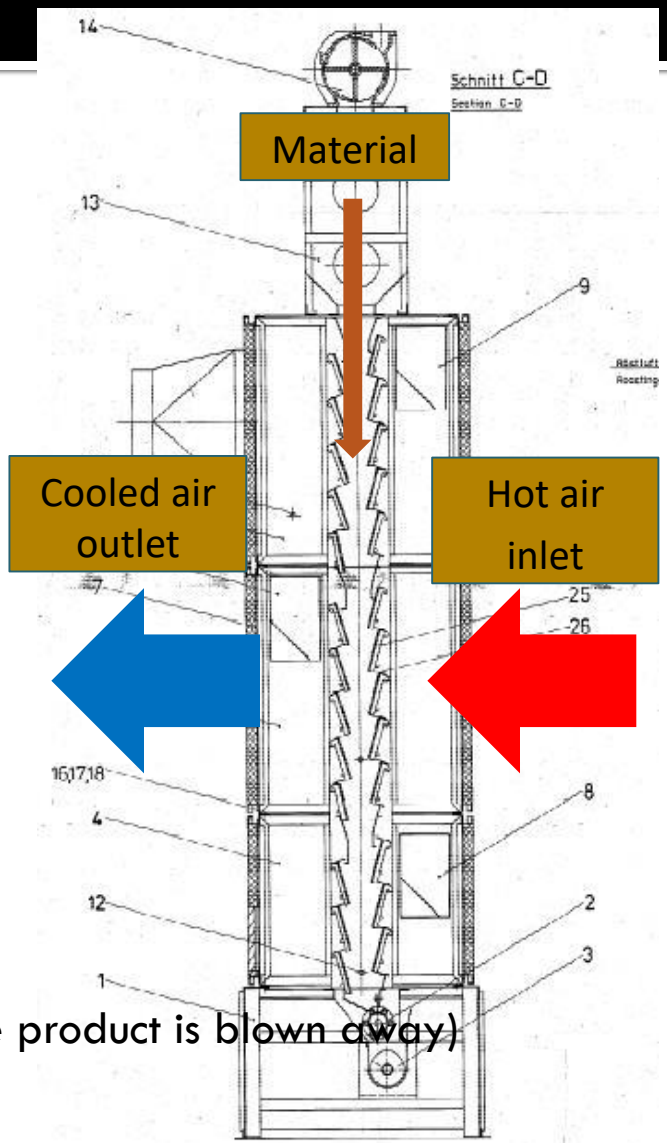

- CONTINUOUS system
  - Technology based on the hot air injection
    Can only be used with whole products and kernels
  - <u>Advantages</u> :
    continuous process = low operating cost,
    no moving part,
  - <u>Limits</u> :
    large and voluminous installation,
    impossible to treat humid products and small particles,
    low energy efficiency ≈ 50% (energy used to heat the product is blown away)
    product is in mass
    electrical consumption (based on a 5t/h unit) ≈ **<u>350 kWh/ton</u>**

Existing technologies

Spiral roaster heating by contact

1. Product is fed through spiral tube
2. Product is heated by direct contact with hot tube going up by vibration
3. Product is cooled down by the second spiral tower

Advantages:

- Transport by vibration, no damage to particles
- Electricity: no CO_2 emmisions

Limits:

- Minimum of quantity is 250 KG, no small lots
- Can only feed the tube to 1/3
- Impossible to guarantee the inside is clean
- Uneven mixing drives to uneven roasting
- Roasts only by conduction (by contact)
- No air flow control
- 150kWh/ton electrical consumption (roasting)
- The steam generated by product goes out by cheliney effect and is slowing down the process as it goes up into the process.

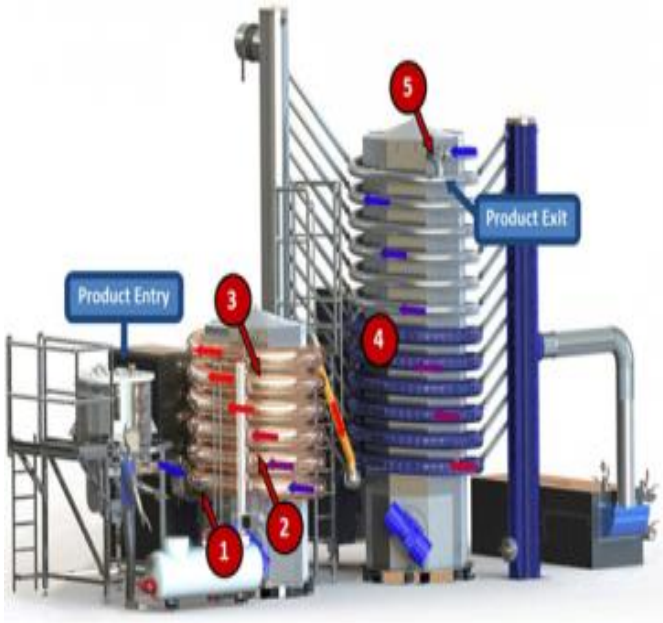

Existing technologies

Belt roaster

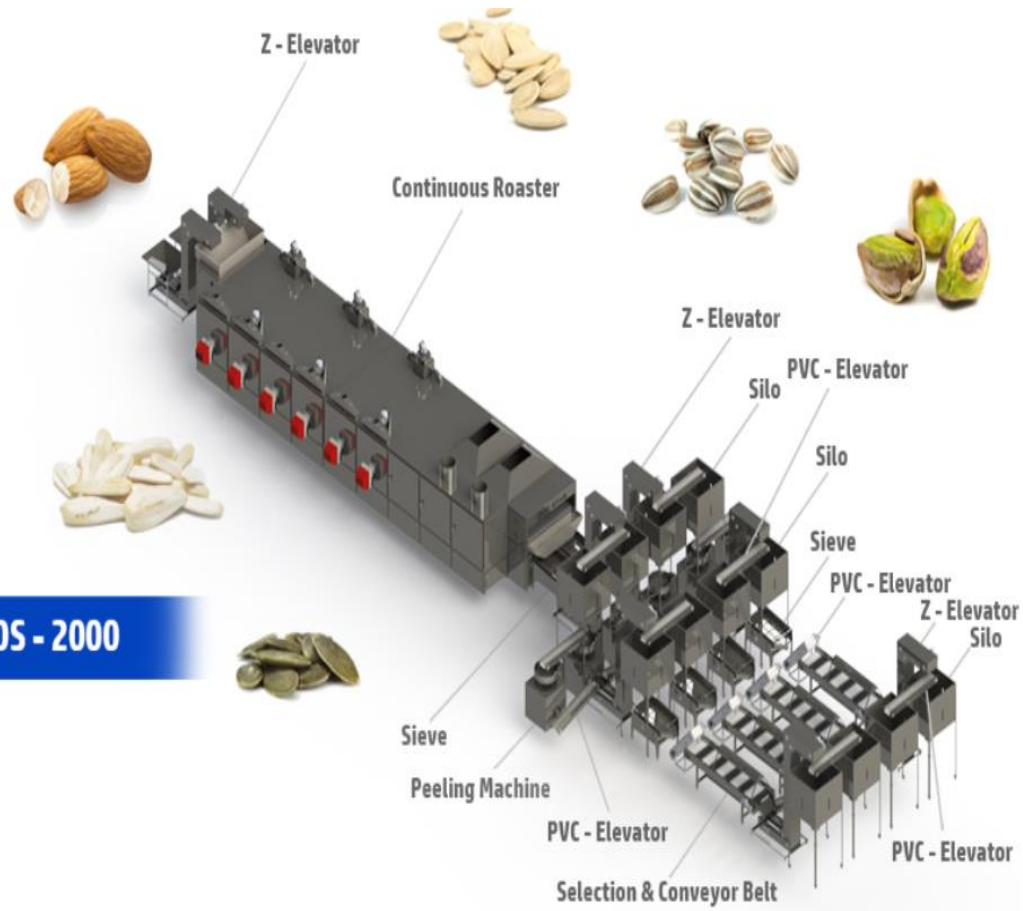

OS - 2000

Continuous Roaster

Existing technologies

Belt roaster continuous roaster heating by air

Product is fed on a belt conveyor for transportation, hot air roasts the product

Advantages:

- Transport by belt no damage to particles
- Product is on a thin layer
- Commonly used for nuts

Limits:

- Uneven mixing leads to not even roasting
- Steam is removed wich is saving at middle and end of process but losses at begining of process.(no better way than steam to pre-heat product when cold)
- Roasts only by air
- 250kWh/ton
- CO_2 émissions
- Huge airflow

Means big loss of aroma and flavor.

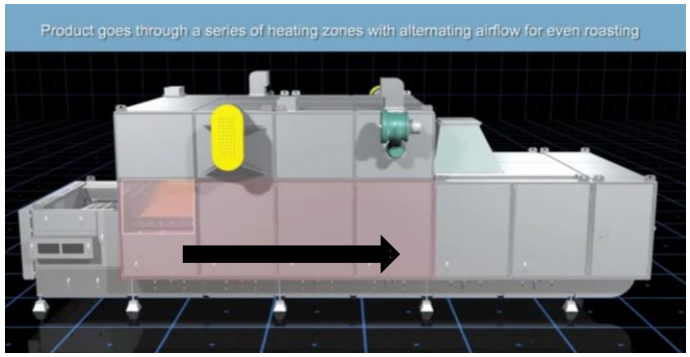

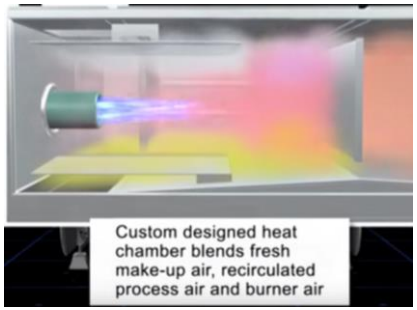

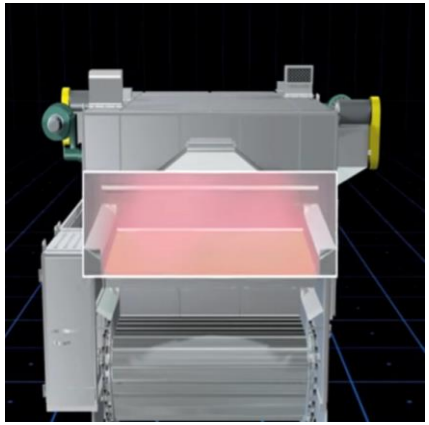

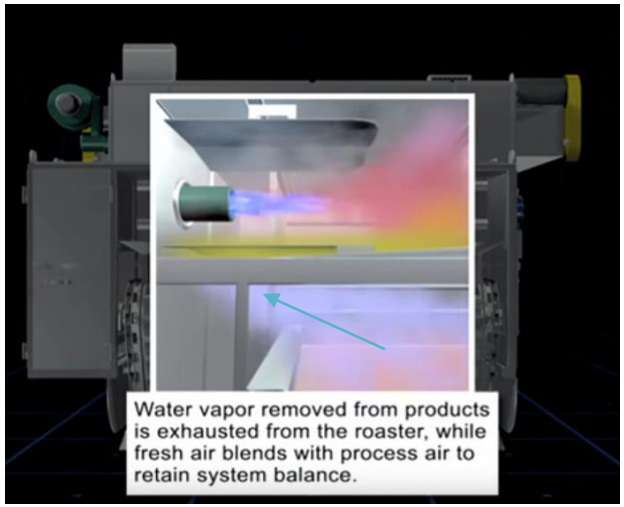

Existing technologies

- Batch roasters
  - rotating paddles product is not in mass
  - rotating chamber product is in mass
- Continuous roasters
  - Heating only by contact
  - Heating by air only

  - ALL THESE ROASTERS ARE **DRY ROASTERS**
  - The steam generated by product is blown away

Systems developed by FCD

FCD's first generation roasters

TSB100

A small batch roaster

TS Roaster

continuous roaster

FCD's TS® roaster

- ▸CONTINUOUS roasting process
- ▸FLEXIBILITY of treatment of the batch technologies
- ▸SIMPLICITY of operating of the continuous technologies

▸<u>Advantages</u> :

- few moving parts,
- possibility to treat all bulked products,
- possibility to treat humid products,
- easy and low maintenance,
- high energy efficiency ≈ 95%,
- preservation of flavors and aroma,
- easy cleaning (cover can be opened)

<u>Limits:</u>

Product is in mass

Paddles can break fragile products like cashew nuts, peanuts..

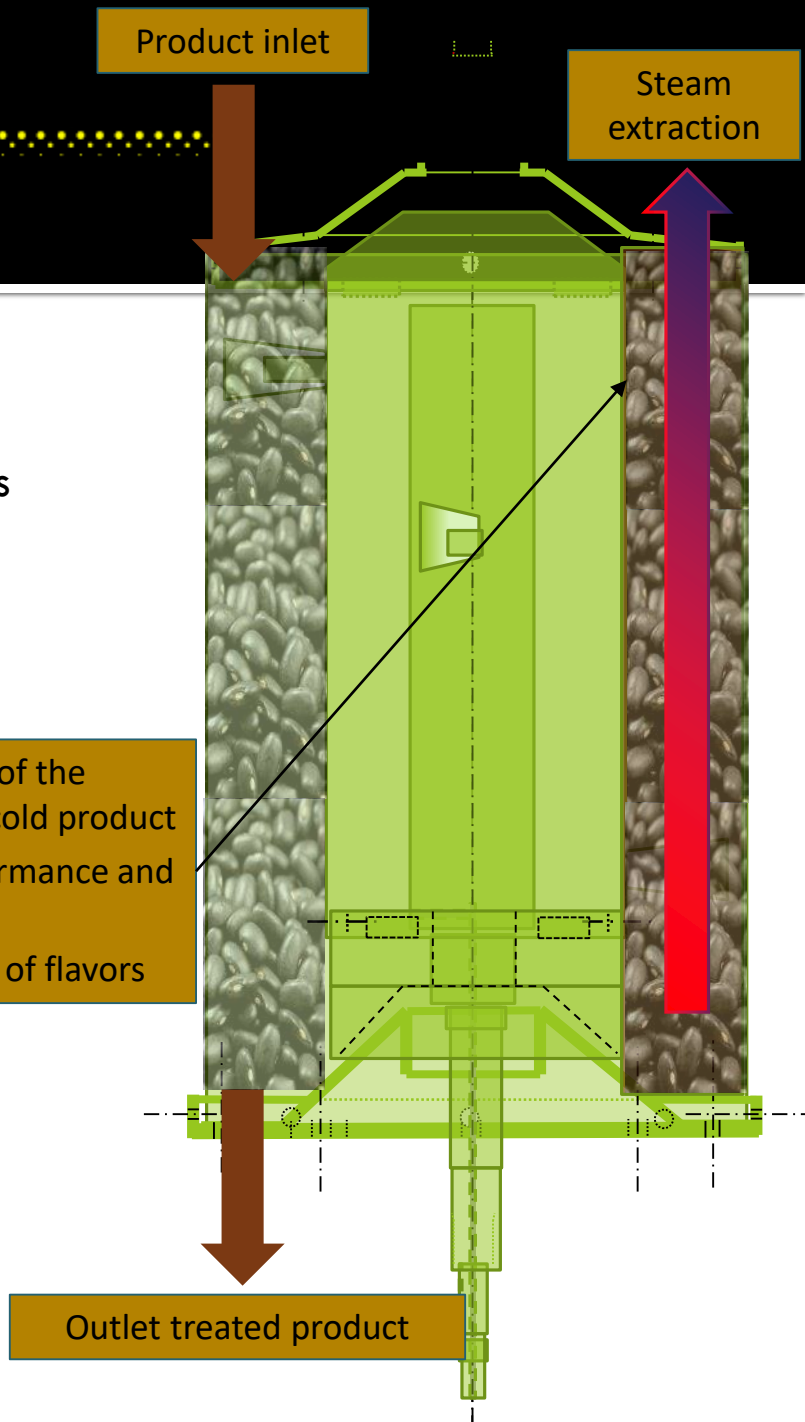

All roasters presented show the technical issues to solve:

- Necessary to save energy
  - Air heated must be re used and not thrown away
- Avoid heating by gaz that create CO2 is necessary
  - Use electrical resistances
- Necessary to work with a thin layer because too much energy consumption to heat a big mass of product
  - Use thin layer distributed by vibrations
- Ratio air to product is key point to control flavors and aroma, so air flow control is necessary
  - Use a perfect control on air flow and temperature of air injected at each zone independently
- Necessity to create separate sections
- Necessary not to break particles and perfect mixing
  - Use a step system to mix with small fall between steps
- Necessary to use steam generated during first stages of roasting to keep aroma and flavors and pre heat product , but necessary not to have it for next steps of roasting
  - Use a vertical spiral system where product goes down whereas steam goes up

AND NOW

2021 Roastinstep® is born

→ Preserves taste, protects the planet

Process diagram

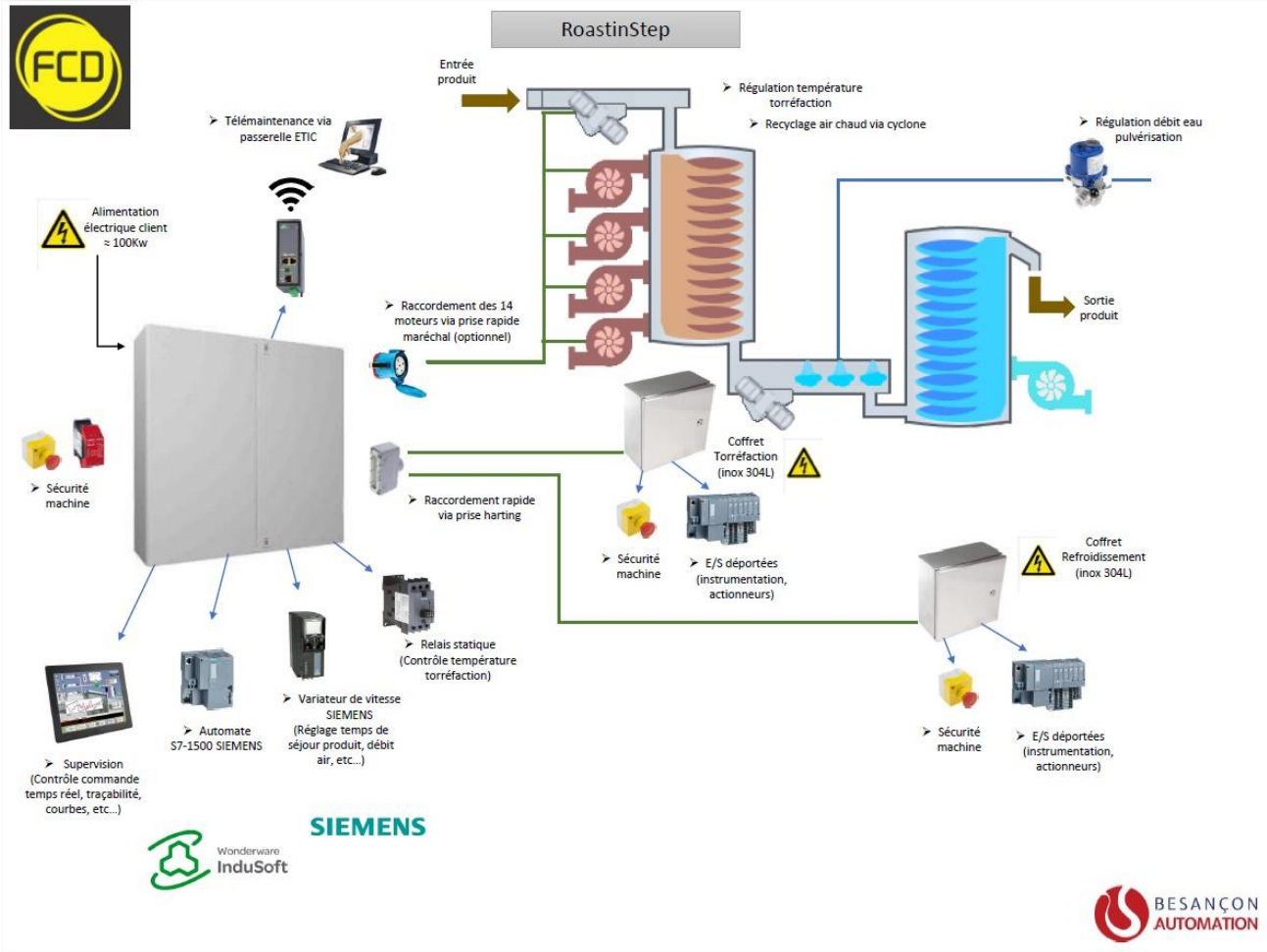

ROASTINSTEP process présentation

- The process consists in a transport by vibration on an horizontal ring. At the end of the ring the product falls by gravity to the next stepon the lower ring. This succession of steps ensures a perfect mix.
- There are more than 20 steps, the diameter , height of roaster and width of rings are adjustable in order to match the required capacity.
- The bed thickness will never change in order to garantee the homogeneity and eveness of treatment.
- The hot air is injected on one side of the roaster by different electrical resistances coupled with fans. This system allows to have different seperated zones and ensures a perfect control of air temperature and air flow to develop flavors and aroma.
- Of course it is possible to adjust on each fan the air flow and air temperature.
- On the over side of the roaster a precise system of extraction of air allows to control the flow inside each zone.
- The hot air extracted goes to a cyclone to remove dust, products skins. And is then blown again in system in order to have great energy savings.
- There's of course the possibility to use and blend it with fresh air in case of need.

SUSTAINABILITY

- **ROASTINSTEP is heating by air and contact the product , origin is electricity ONLY**
- It means no CO_2 emissions from a gaz
- It means a complete GREEN roaster
- The re use of hot air and use of steam created to heat product ensures a **40% energy saving**

ROASTINSTEP

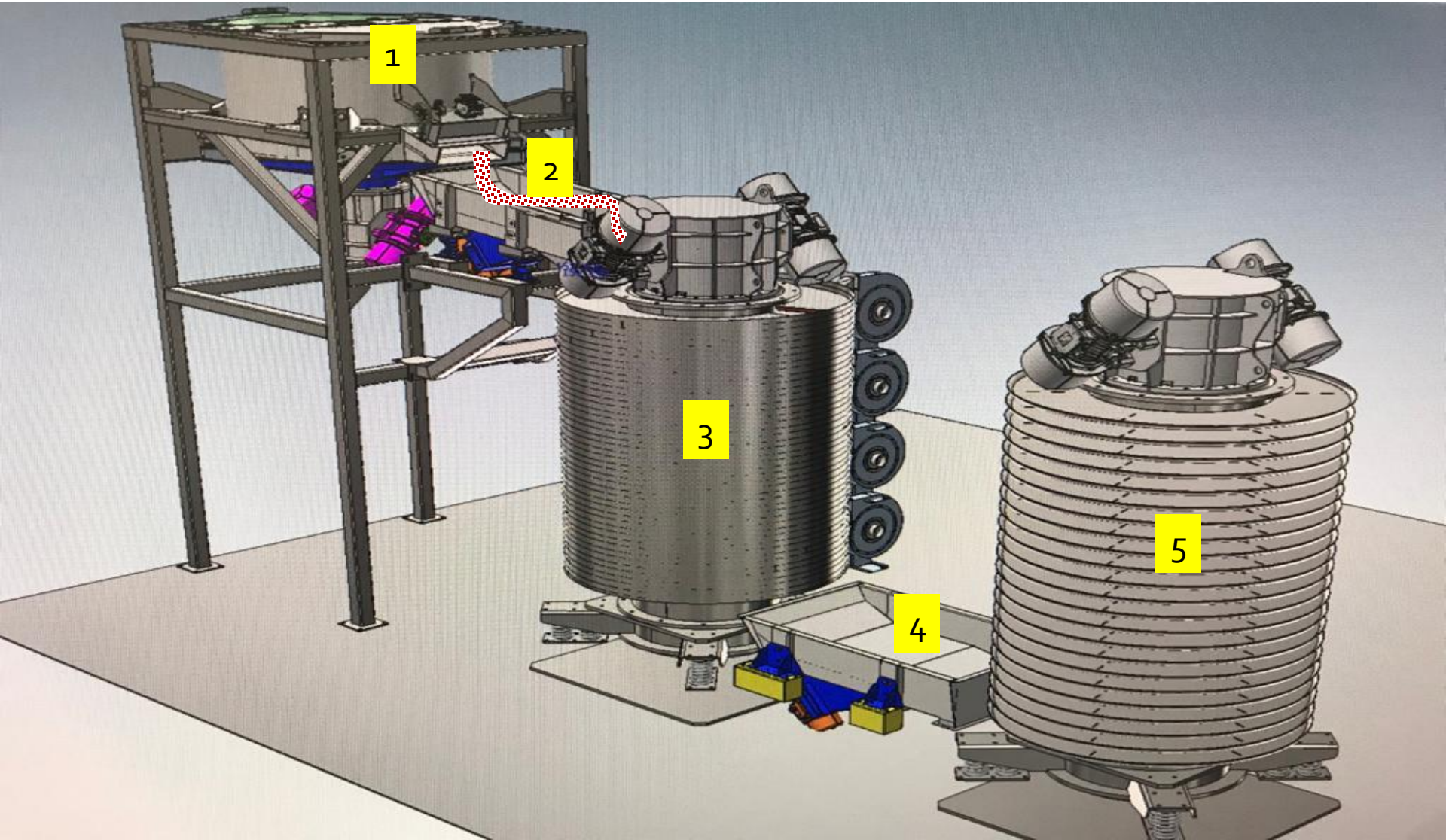

Product profile in Roastinstep®

1. In a first time the product is fed into the hopper.
2. A vibrating Dosing Tray (DT) allows to remove fines and dust before entering roastinstep.
3. Then a regulated layer of product goes into Roasting vibrating tower. Product is heated by hot air and by contact on the rings around the tower. Its temperature will rise from room to 100°C thanks to hot air injected and steam coming from product below. (Steam is most efficient way to pre heat a product, moreover it ensures a perfect pasteurization of product). The use of steam generated by product below is key point for **energy savings** or Roastinstep technology. Once at 100°C the product will remove its internal water into steam. The hot air temperature and flow are precisely controlled in each zone. After internal water is removed the product temperature will rise up to desired temperature into a controlled air flow. This process air containing some aroma and flavor is then extracted and after cyclone re injected into process. It is the second keypoint of Roastinstep energy savings.
4. After roasting the product will go to a cooling section (tray) rising on a classical spiral elevator.
5. However this spiral elevator uses a Vibrowest cooling technology that allows cold air to be directly injected from inside onto the product. After a controlled residence time in the cooling spiral elevator the product temperature is cold and ready for next step.

How was born Roastinstep® ?

Why is the Roastinstep so energy efficient ?

energy consumption ≈ 70 kWh/ton

(running conditions)

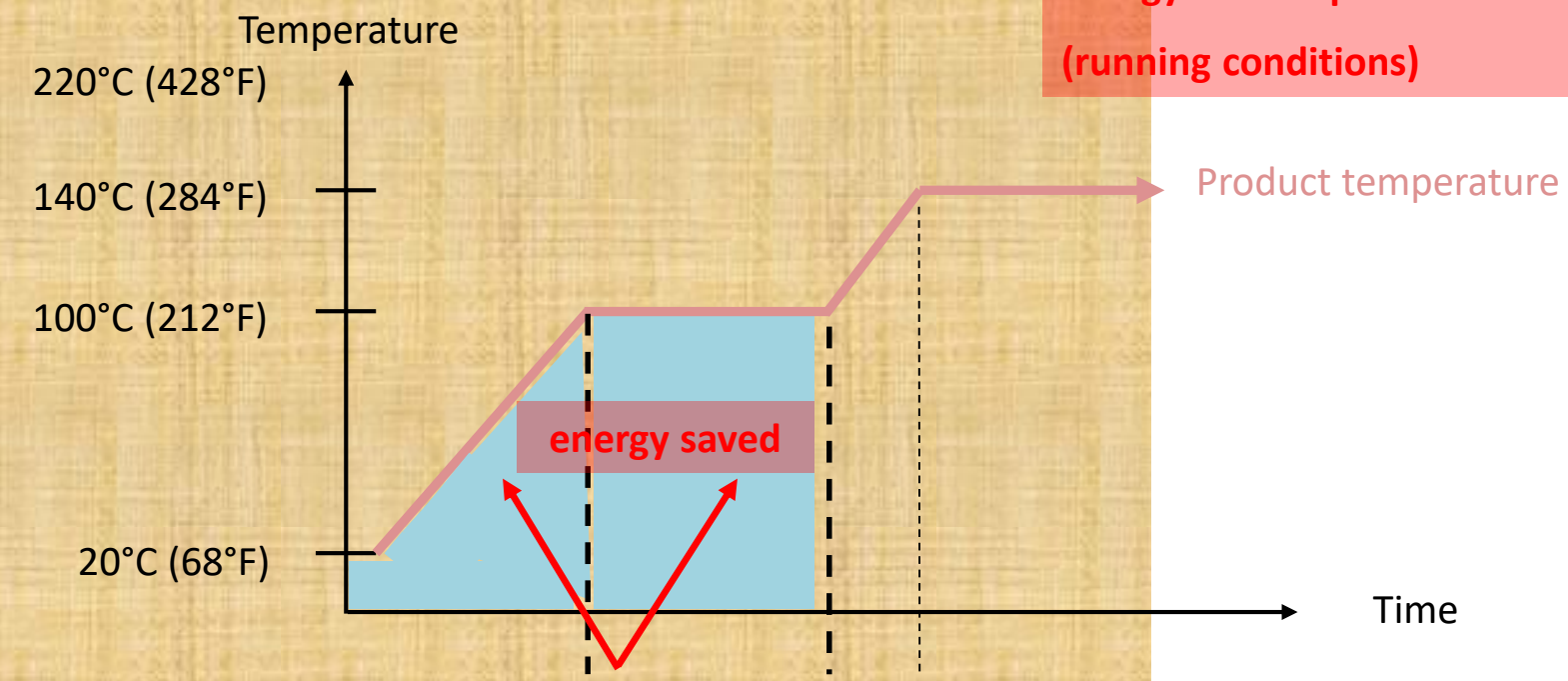

Roastinstep: Main features

Possibility to roast all sorts of ingredients	**YES**	Cashews, almonds, coffee with thin bed and vibration
Possibility to treat small lots ?	**YES**	
Homogeneity of the treatment ?	**YES**	Steps ensure the mixing, thin product bed
Easy, quick and accessible cleaning ?	**YES**	<3hrs, doors for quick access
Low energy cost ?	**YES**	<70 kWh/ton, thin product bed
Low maintenance cost ?	**YES**	< $1000/year (vibrating system)
Eco friendly process (CO_2 emissions	**YES**	

Roastinstep main benefits

- a continuous roasting process patented by FCD
- the synthesis of the advantages of existing roasting technologies:

  thin layer – continuous process – flavor and aroma control - energy savings

- <u>"RoastinStep" ANSWERS TWO STRATEGIC ELEMENTS:</u>

The reduction of the COSTS	The control of the QUALITY
HOW ?	HOW ?
- By reducing the energy costs by minimum 40% compared to other technologies - By reducing the maintenance costs/ year - By using a continuous process (= low labor cost) & lower line investment (less buffer silos)	- By permanently mixing the product = control of the temperature gradient = homogenization of the treatment - By controlling the air flow and air temperature in each zone - By controlling the residence time on roasting AND cooling

summary :ROASTINSTEP®

- Transport by vibration not to damage particles
- Heat by contact and by air
- Re use of steam coming form previous product to save energy
- Re use of hot air to save energy

electrical consumption ≈ **70 kWh/t**

Roastinstep versus competing technologies

Kind of roaster	Heating by air	Heating by contact	Treat in mass	Treat in thin layer	Possible to treat fragile products (cashew peanuts..)	Possible to control air flow	Possible to use steam generated by product to pre heat product	Possible to treat coffee and cocoa	Air temperature profile possible	Energy consumption in KWH/T	CO_2 emissions	GREEN PROCESS	Price for a 1T/H line in euro
Rotative gaz roaster	no	yes	yes	no	no	yes	No	Yes	Yes	280	Yes	no	750 000
Drum roaster	yes	yes	yes	no	no	yes	no	yes	yes	250	yes	no	
Spiral roaster	no	yes	no	yes	yes	no	no	no	no	150	no	yes	754 000
Vertical air roaster	yes	no	yes	no	no	no	no	yes	yes	350	yes	no	
Belt roaster	Yes	No	No	Yes	Yes	No	No	No	No	130	Yes	No	
FCD TS roaster	Yes	Yes	Yes	No	No	No	Yes	Yes	No	110	No	yes	650 000
FCD roastinstep roaster	Yes	Yes	No	Yes	Yes	Yes	Yes	Yes	Yes	70	no	yes	650 000

Roastinstep versus sustainability

L'équation de Kaya

$$CO_2 = \frac{CO_2}{E} \times \frac{E}{PIB} \times \frac{PIB}{Pop} \times Pop.$$

Roastinstep uses electricity , no CO_2 emissions

Roastinstep uses 70KWh/t which is at least 50% lower than any competing technology

Key figures & market insight

- 2019 : a big player in roasters sold for 112 Million € of roasters (68 units)
- 2000 roasters sold in the world each year
- **CO_2 emissions, sustainability becomes a priority , a « green » process will soon be a need for the planet**